GOLETA–COLEGIO–ISLA VISTA–VEGAS 66KV

NOTES:
- POLES ARE LOCATED IN TIER III HFIA
- FOLLOW ENGINEERING LWS FRAMING DIAGRAM FOR POLE HEAD CONFIGURATION, ARM SPACING, X–BRACE, AND OTHER REQUIREMENTS
- CREW TO REPLACE WOOD POLES WITH LWS DUE TO TIER III HFIA & WOODPECKER DAMAGE
- RAISE POLE HEIGHTS BY 5' PER ENGINEER REVIEW
- IF THE BOTTOM 3' OF THESE POLES ARE COVERED IN MASTIC, GROUND THE POLE PER TO723
- DIRT ROAD IS ±1,877' EAST FROM SUNSET RIDGE RD & LA GOLETA RD
- POLES ARE ±1,141' WEST FROM DIRT ROAD & SUNSET RIDGE RD

GPS COORDINATES:
34.459980°, –119.842061°

TRANSFERS:
3– 954SAC 66KV
2– TTC

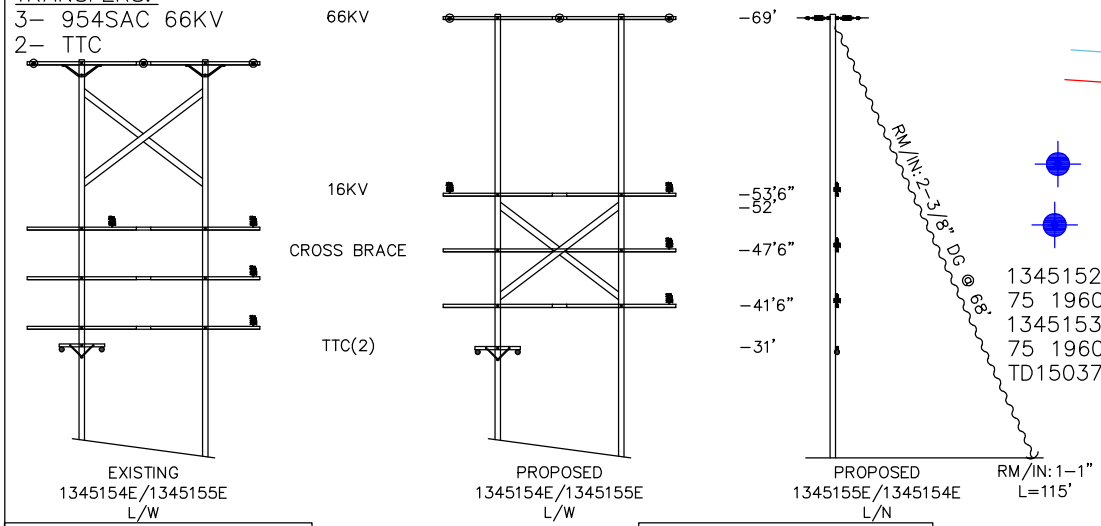

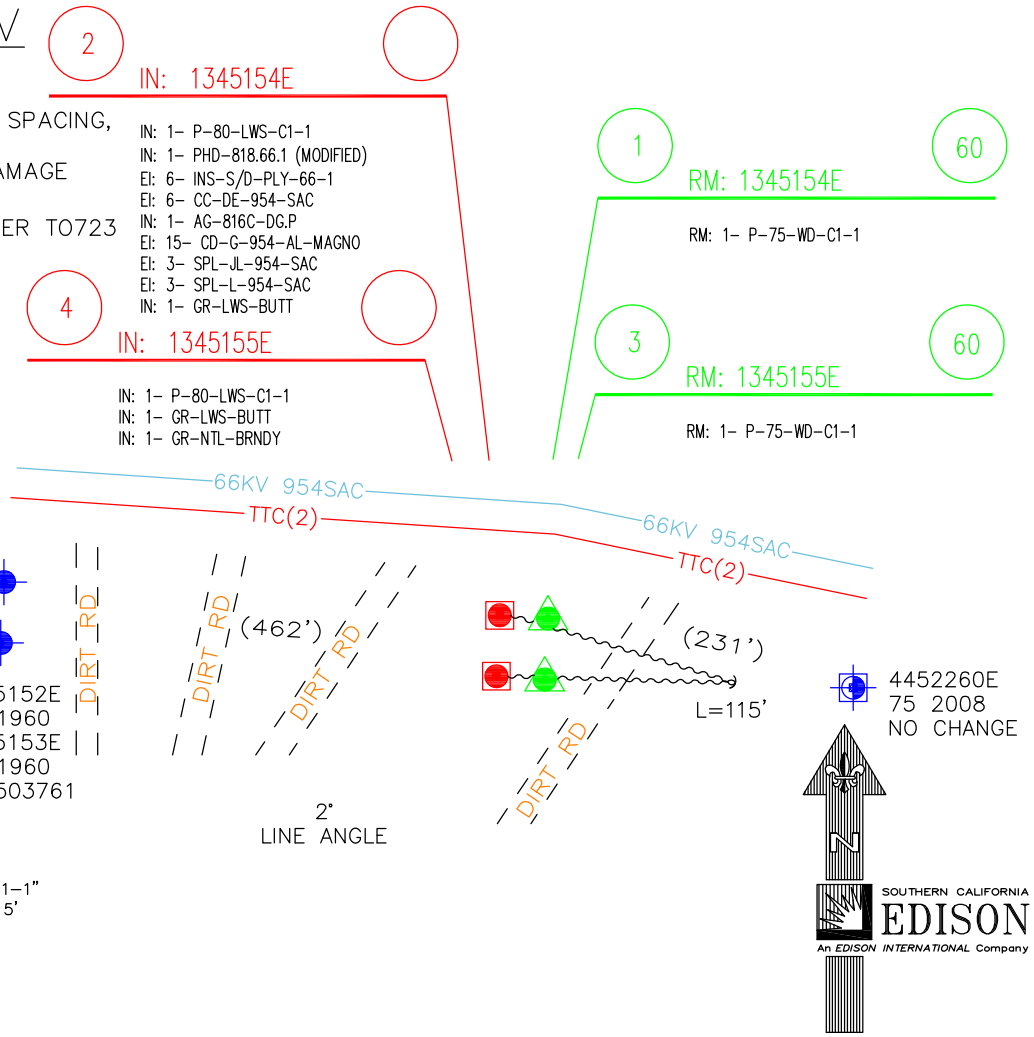

TRANSFERS:
3– 954SAC 66KV
2– TTC

PROJECT REQUIREMENTS (Y/N)

EDISON EASEMENT REQUIRED	N
PWRD 88 REQUIRED	N
UG CIVIL ONLY WORK ORDER	N
PERMIT REQUIRED	Y
PERMIT TYPE: CITY	
OUTAGE REQUIRED	Y
OUTAGE DATE: _____ TIME: _____	
TRAFFIC CONTROL REQUIRED	N
PED. TRAFFIC CONTROL REQ'D	N
CONVEYANCE LETTER REQ'D	N
ENVIRONMENTAL CLEARANCE REQ'D	Y
CSD 140 (TLM) REQ'D	N

BULLETIN 322
HIGH FIRE/HAZARD AREA

LEGEND:
- SUNSET RIDGE RD
- LA GOLETA RD
- DIRT ROAD
- 1345154E/1345155E

JOINT MEET	N	PAVEMENT REPAIR	N
TRUCK ACCESS	Y	ASPHALT: CONCRETE:	
HFIA	Y	REPAIR SIZE:	
CRITICAL HABITAT	N	WIND RATING 8# GRADE A	
EAGLE ZONE	Y	NETCOMM SHEET	N
MITC POLE	N	CONTACT CATV	N
RISER	N	TREE TRIMMING REQ'D	N

EOI POLE REPLACEMENT
ASSOCIATED WITH DIST TD1533206

PROJ # 1767048	ESTIMATOR STRATTON, RICHARD	PHONE (909)469–7179	J.P.A. NO.
GRID NORTH COAST	THOMAS BROS.	INVENTORY MAP 19–50	SAP ORDER TD1533103
DIVISION NORTHWEST	DISTRICT 49 – SANTA BARBARA	PRODUCT/MAT 1533103–119 POLE OH REPL	
LINE ET–01800–Goleta–Colegio–Isla Vista–Vegas–NON–ISO			LINE VOLTAGE 66KV

REV.	APPROVED BY	DATE	CHECKED BY	DRAWN BY	DATE

SOUTHERN CALIFORNIA EDISON COMPANY

PROPOSED CONSTRUCTION (LOCATION)
R/R 2 EOI POLES
SUNSET RIDGE RD & LA GOLETA RD
GOLETA, CA

SHEET 1 OF 1

DESIGN NO. 1139411_0.01