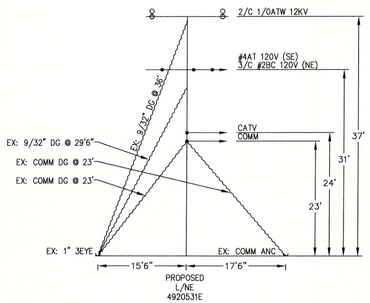

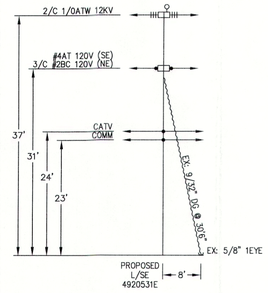

UNGUYED DE CALC (0531E)

110' SPAN #4AT W/ 75% HEAVY	= 453 LBS
453 LBS x 31'	= 14,043 FT-LBS
45' CLASS 4 DF-TB POLE IN 6LB WINDZONE GRADE A CAN HOLD	= 18,145 FT-LBS
BREAST BLOCK & POLE KEY IN CLASS 4 SOIL CAN HOLD	= 47,500 FT-LBS

CREW NOTE:
-CREW TO ADJUST HEIGHTS PER POLE HEAD DETAIL TO MAINTAIN PROPER CLEARANCES

NOTE:
-NO IPI REQUIRED
-NO TC REQUIRED
-NO PTC REQUIRED
-HIGH FIRE AREA TIER 3
-EAGLE ZONE
-POLE BEING REPLACED ON DET POLE TD1471173 UNDER POLE 9575T
-DISTRICT TO REMEDIATE EXISTING G.O. 95 SAG INFRACTION BETWEEN SECONDARY AND COMM

GPS:
LAT: 34°49'07.05"
LONG: 118°57'20.79"

ELEVATION: 4885 FT

16 **EX: 4920531E POLE**

45' CLASS 4 (N/A) INSP. N/A
RM: 196' 2/C #4A 12KV (TO 4011E)
1-10' DBL DE COMPOSITE XARM W/BRKT
2-12KV ANGLE P&I
4-12KV DE (#4 & 1/0A)
IN: 196' 2/C 1/0ATW 12KV (TO 4011E)
1-10' DBL DE COMPOSITE XARM W/BRKT
2-12KV NYLON POLY PIN
4-12KV DE (#4 & 1/0A)
4-WILDLIFE DE COVER

CREW NOTE:
-CREW TO ADJUST HEIGHTS PER POLE HEAD DETAIL TO MAINTAIN PROPER CLEARANCES

NOTE:
-NO IPI REQUIRED
-NO TC REQUIRED
-NO PTC REQUIRED
-HIGH FIRE AREA TIER 3
-EAGLE ZONE

GPS:
LAT: 34°49'08.36"
LONG: 118°57'19.13"

ELEVATION: 4878 FT

EX: 1964011E POLE 17

45' CLASS 4 (2017) INSP. N/A
RM: 185' 2/C #4A 12KV (TO 0241E)
1-10' SNGL XARM VB
2-12KV ANGLE P&I
2-9/32" DOWN GUY
1-3/4"x8' DBLE EYE ANCHOR ROD & PLATE
1-RAPTOR HOOD W/ SET OF 2 EXT.
IN: 185' 2/C 1/0ATW 12KV (TO 0241E)
1-10' DBL DE COMPOSITE XARM W/BRKT
2-12KV NYLON POLY PIN
4-12KV DE (#4 & 1/0A)
1-9/32" DOWN GUY
1-3/8" DOWN GUY
1-1 1/4"x10' TRPL EYE ANCHOR ROD & PLATE
4-WILDLIFE DE COVER

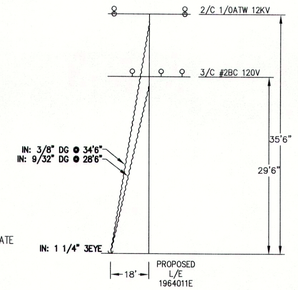

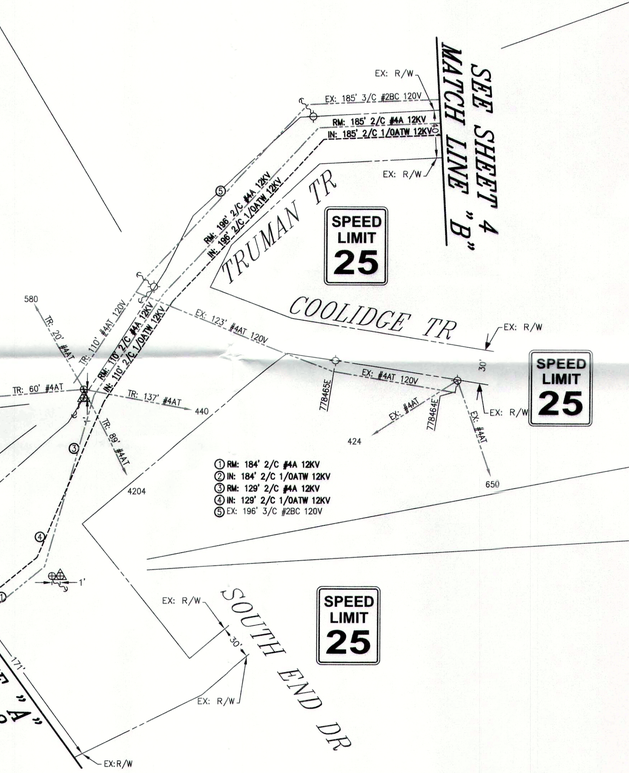

T.L.M. DATA: 4375631E

	SIZE	KVA	CUST	% LOAD
EXIST.	25	20.89	6	83.56%
PROP.				%

CLIMATE ZONE: 7
VOLTAGE DROP:
FLICKER FACTOR:
PRI. CIRCUIT: TENNECO 12KV

ADDRESS:	METER NUMBER
588 TRUMAN	222013-693937
580 TRUMAN	222013-698783
4204 TRUMAN	222013-693938
440 OAKMONT	222013-690798
650 COOLIDGE TRL	222013-695521
424 OAKMONT	322010-378488

NOTE:
2+ MILES FROM SUB

CREW NOTE:
-CREW TO INSTALL WEDGE COVERS PER DOH DC535-1 WHEN APPLICABLE

NOTE:
-NO TC REQUIRED
-NO PTC REQUIRED
-E TO PTD
-HIGH FIRE AREA TIER 3
-EAGLE ZONE
-POLE BEING REPLACED DUE TO RECONDUCTOR

GPS:
LAT: 34°49'05.97"
LONG: 118°57'21.13"

ELEVATION: 4903 FT

14 **RM: 4375631E POLE**

40' CLASS 5 (2000) INSP. 2015
RM: 110' 2/C #4A 12KV (TO 0531E)
1-8' SNGL XARM FB
2-12KV P&I
2-166 ROLLER
1-9/32" DOWN GUY
1-8" SNGL HELIX SCREW ANCHOR
1-XFMR BUSHING COVER
TR: 1-25KVA 12KV 120/240V 1Ø
110' #4AT 120V (TO 0531E)
137' #4AT SVC (TO 440)
89' #4AT SVC (TO 4204)
60' #4AT SVC (TO 588)
20' #4AT SVC (TO 580)
2-12KV FAULT TAMER

SET POLE 1' NORTH

15 **IN: 4375631E POLE**

45' CLASS H1 WF
IN: 110' 2/C 1/0ATW 12KV (TO 0531E)
1-12KV SURGE ARRESTER T-GAP 1P
1-10' SGL HEAVY TANGENT COMPOSITE XARM W/BRKT
2-12KV NYLON POLY PIN
2-166 ROLLER
2-9" EXT BRACKET FOR SEC RACK
1-9/32" DOWN GUY
1-1 1/4"x10' TRPL EYE ANCHOR ROD & PLATE
1-XFMR BUSHING COVER
2-CUTOUT COVER

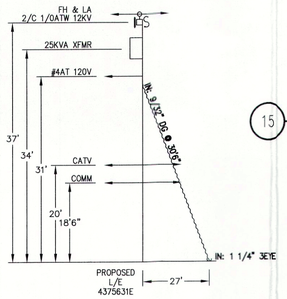

NOTE:
-NO TC REQUIRED
-NO PTC REQUIRED
-E TO PTD
-HIGH FIRE AREA TIER 3
-EAGLE ZONE
-POLE BEING REPLACED TO MAINTAIN PROPER G.O. 95 SAG CLEARANCES

GPS:
LAT: 34°49'04.74"
LONG: 118°57'21.48"

ELEVATION: 4923 FT

RM: 4375632E POLE 12

40' CLASS 5 (1999) INSP. 2015
RM: 129' 2/C #4A 12KV (TO 5631E)
1-8' SNGL XARM FB
2-12KV P&I CLAMP TOP
1-9/32" DOWN GUY
1-8" SNGL HELIX SCREW ANCHOR

SET POLE 1' WEST

IN: 4375632E POLE 13

45' CLASS 4 WF
IN: 129' 2/C 1/0ATW 12KV (TO 5631E)
1-10' DBL DE COMPOSITE XARM W/BRKT
2-12KV NYLON POLY PIN
4-12KV DE (#4 & 1/0A)
1-9/32" DOWN GUY
1-1 1/4"x10' TRPL EYE ANCHOR ROD & PLATE
4-WILDLIFE DE COVER

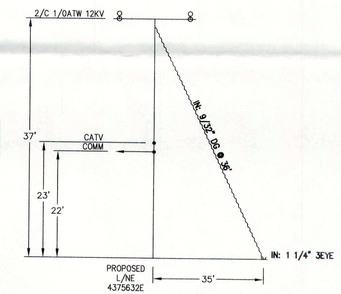

N

SOUTHERN CALIFORNIA EDISON
An EDISON INTERNATIONAL Company

SCALE: 1 IN = NTS FT

UNDERGROUND SERVICE ALERT
Dial 811
Call USA
For Underground Locating
2 Working Days Before You Dig

RELATED TD'S/DESIGN NO'S
TD1525972/1133880

INVENTORY MAP NO'S
11-66B
11-66C
11-66D

DATE	REVISION DESCRIPTION	APPROVED	DRAWN	CHECKED

FINAL DESIGN
APPROVED FOR CONSTRUCTION

DISTRICT 36-ANTELOPE VALLEY	PROJ. MGR. CAROLINA GONZALEZ PHONE 805-654-7311	PLANNER LUIS ESTRADA PHONE 909-820-5614		CONTRACT PLANNER: RANDY AVILA/HTE PHONE: 909-628-1253
FOREMAN	TRUCK NO. P/E	INVENTORY MAP NO. THOMAS GUIDE SEE ABOVE	GRID NO.	SR NO. 2661817
CSD 140 Y ___ N ___	BY-PASS CODE EXISTING ___ CHANGE TO ___	TLM CHECKED ___ %LOAD	J.P.A. NO.	DESIGN NO. 1133886
PRODUCT/SAP NO. TD1525978		PRODUCT/SAP NO.		ASSOCIATED DESIGN NO.
				PRODUCT/SAP NO.

TYPE	APPROVED BY	DATE	CHECKED BY	DRAWN BY	PAX #
F		11/06/19			
P		10/28/19		DM/HTE	
B		04/15/19		ED/HTE	

PROPOSED CONSTRUCTION (LOCATION)
PIF #36610 – HFA 2020 – TENNECO 12KV
VARIOUS LOCATIONS
FRAZIER PARK, CA

Southern California Edison Company

SHEET 3 OF 7

JOB NO. 1133886_0.01

1133886_0.01-1.dwg
Plotted: Nov 06, 2019 - 1:51pm comesonr