(IDLE) SAUGUS–ELIZABETH LAKE–FILLMORE 66kV T/L

NOTES:

- REPLACE H–FRAME CAUSED BY BURNT POLE 4089526E. REPLACE WOOD H–FRAME WITH LIGHTWEIGHT STEEL.
- STRUCTURE REPLACEMENT WILL BE TALLER FOR VERTICAL CLEARANCE FOR FUTURE 16KV COVERED CONDUCTOR.
- H–FRAME IS LOCATED ON A SLOPE. DOWNHILL LEG (POLE) WILL BE LONGER THAN UPHILL LEG.
- CREW TO DETERMINE STRUCTURE LOCATION.
- H–FRAME POLEHEAD WILL BE TOH–844 WITH 12' LEG SPACING. INSTALL 25' WOOD (SHARED) CROSSARMS
- INSTALL Z–BRACKETS "SUSPENSION" STYLE (OPPOSITE OF WHAT IS SHOWN IN TOH–844) AS INSTRUCTED BY TRANSM. ENG.
- STRUCTURE IS LOCATED IN TIER 3 – EXTREME FIRE. X–ARMS WILL HAVE 9' VERTICAL SEPERATION PER TOH–004.
- SEE ATTACHED 'STRINGING DATA' SHEET FOR TENSION INFORMATION.
- STRUCTURE REPLACEMENT WILL BE HELICOPTER SET, DUE TO LACK OF ROAD ACCESS FOR HEAVY TRUCK.

TRANSFERS:
4/0 CU TRANSM. 66kV

6-04-2025: Due to material availability poles are being redlined to class H6.
- T. Devestern

NOT TO SCALE

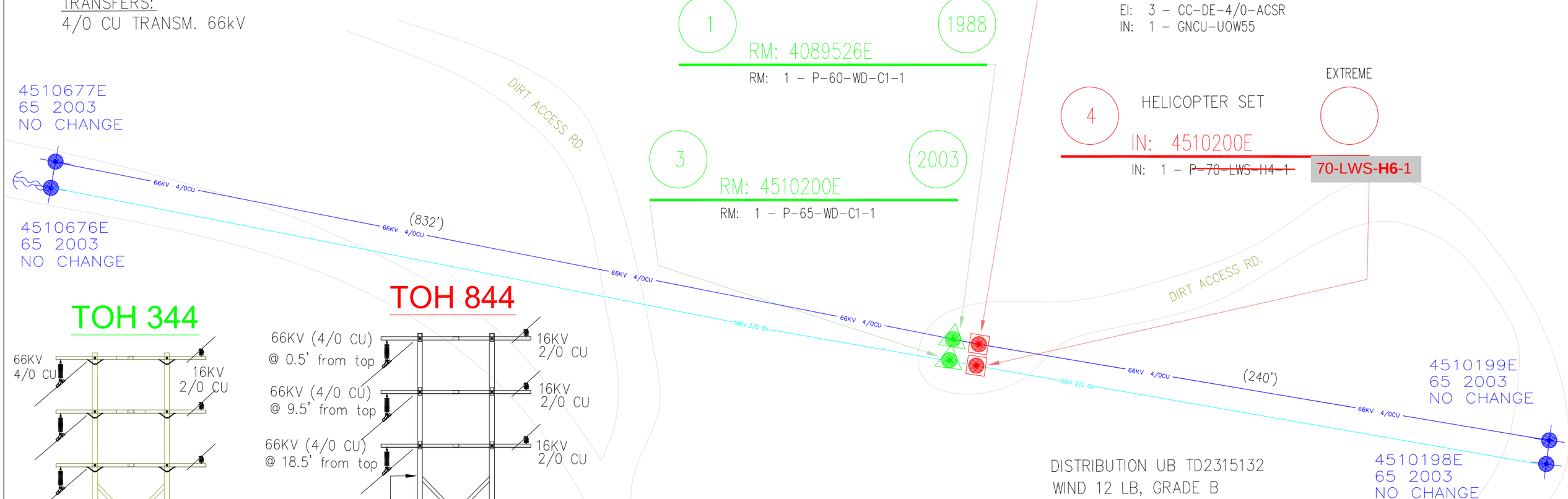

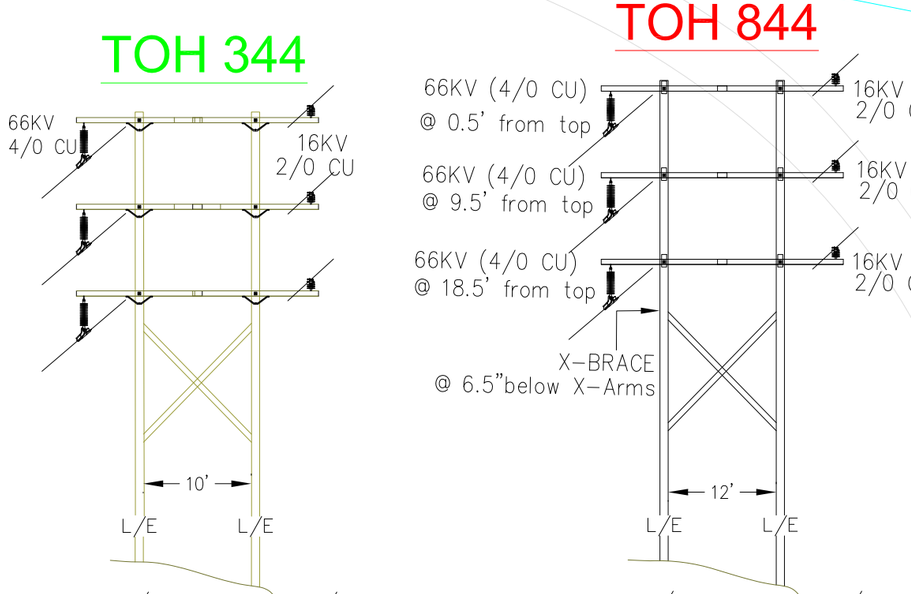

4089526E/ 60' POLE HEAD DETAIL — NOT TO SCALE
4510200E/65' POLE HEAD DETAIL — NOT TO SCALE
EXISTING

4089526E/ 65' POLE HEAD DETAIL — NOT TO SCALE
4510200E/70' POLE HEAD DETAIL — NOT TO SCALE
PROPOSED

DISTRIBUTION UB TD2315132
WIND 12 LB, GRADE B

GPS COORDINATES	
N	34.412028
W	–118.762628

POLE DETAILS
- JOINT POLE [N]
- RENTER [N]
- HELICOPTER SET [N]
- JOINT MEET [N]
- TRUCK ACCESS [Y]
- HAND DIG [N]
- CHEMONITE [N]

PROJECT REQUIREMENTS (Y/N)
- EDISON EASEMENT REQUIRED [N]
- PERMIT REQUIRED [Y]
- PERMIT TYPE: COUNTY
- OUTAGE REQUIRED [Y]
- OUTAGE DATE: – TIME: –
- TRAFFIC CONTROL REQUIRED [N]
- PED. TRAFFIC CONTROL REQ'D [N]
- CONVEYANCE LETTER REQ'D [N]
- ENVIRONMENTAL CLEARANCE REQ'D [Y]
- CSD 140 (TLM) REQ'D [N]

PROJ #	ESTIMATOR	PHONE	J.P.A. NO.
2926739	DEVESTERN, ANTHONY	661–775–1040	N/A
GRID: NORTH COAST	THOMAS BROS.	INVENTORY MAP: 55–48	SAP ORDER: 2315130
DISTRICT: 59 – VALENCIA		PRODUCT/MAT: 2315130 – 119 POLE OH REPL	
LINE 1: ET–00630–Saugus–Elizabeth Lake–Fillmore–NON–ISO			LINE VOLTAGE: IDLE kV
LINE 2			LINE VOLTAGE
LINE 3			LINE VOLTAGE

REV.	APPROVED BY	DATE	CHECKED BY	DRAWN BY	DATE
				A. DEVESTERN	2–5–25

PROPOSED CONSTRUCTION (LOCATION)
MAT 119–POLE OH REPL: 4089526E & 4510200E
HWY 126 PP 1680' N 5580'E//B/O RANCHO CAMULOS
PIRU, CA

SOUTHERN CALIFORNIA EDISON COMPANY

SHEET 1 OF 1

DESIGN NO. 1771376_0.01